HYLAND FLUSH 15 Electric(FHL-15E)

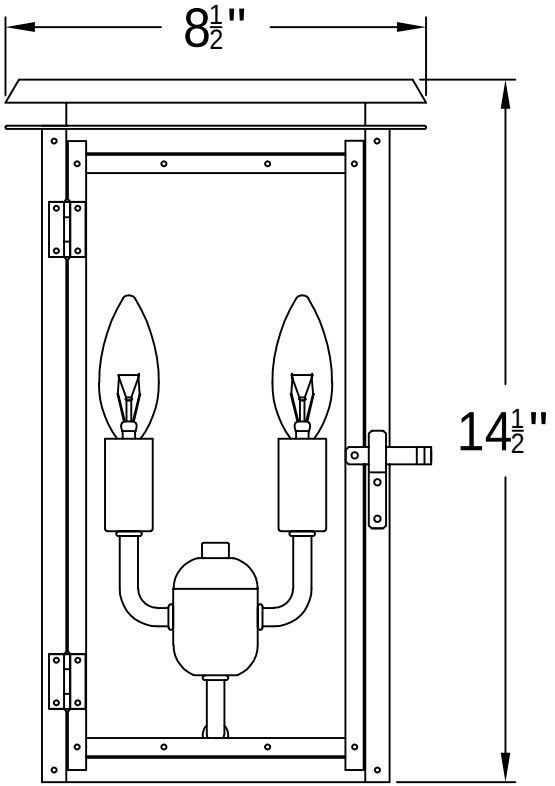

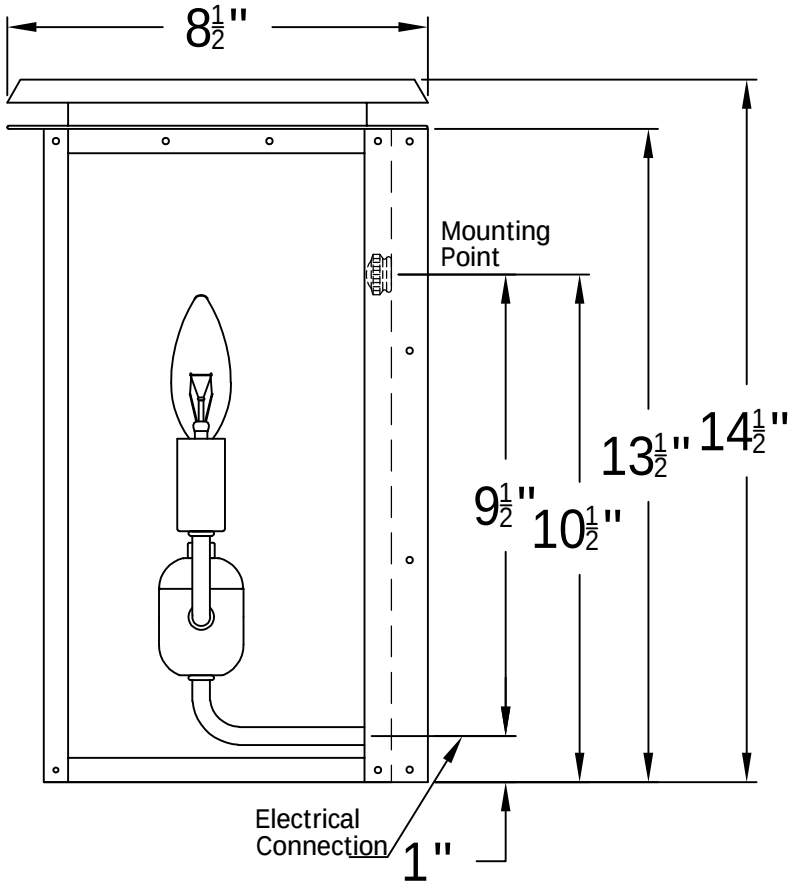

The CopperSmith (BDT)		
Product Description	Drawing Description	9152 Hard Drive Foley Alabama 36536
Sockets:2-E12 Candelabra	REV:A/0	
Watts:2-60W	Date:04/15/2021	SKU Number:FHL-15E
	Drawing by:Jason Huang	Product Name:Hyland Flush 15 Electric