SOMERSET 22 Electric With Classic Moustache
(SO-22E CMS)

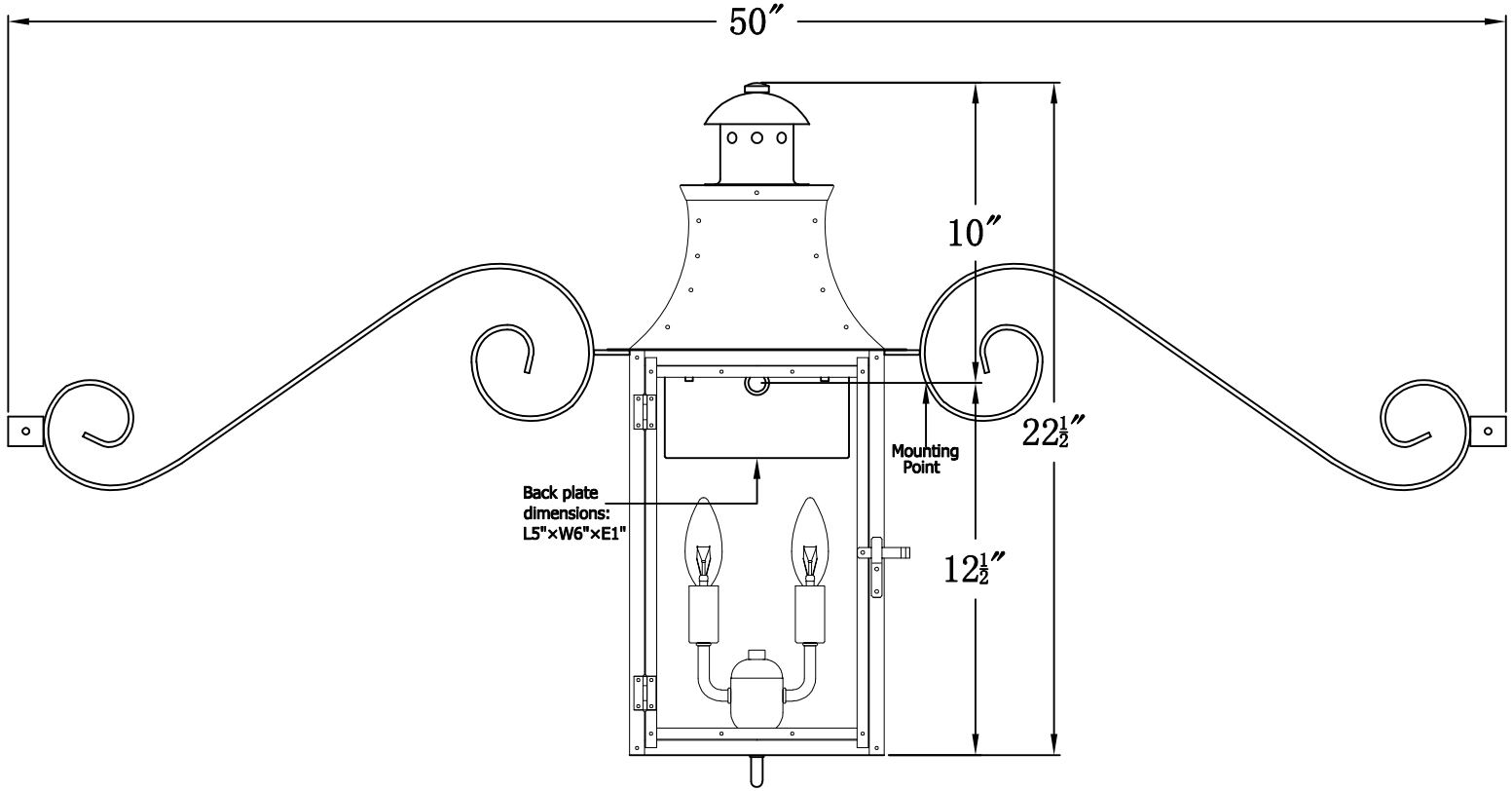

The CopperSmith		
Product Description	Drawing Description	9152 Hard Drive Foley Alabama 36536
Sockets:2-E12 Candelabra	REV:A/0	
Watts:2-60W	Date:04/01/2022	SKU Number:SO-22E
	Drawing by:Jason Huang	Product Name:Somerset 22 Electric