BAYOU STREET 63 Electric With Grand Post Fitter
(BS-63E GPF5)

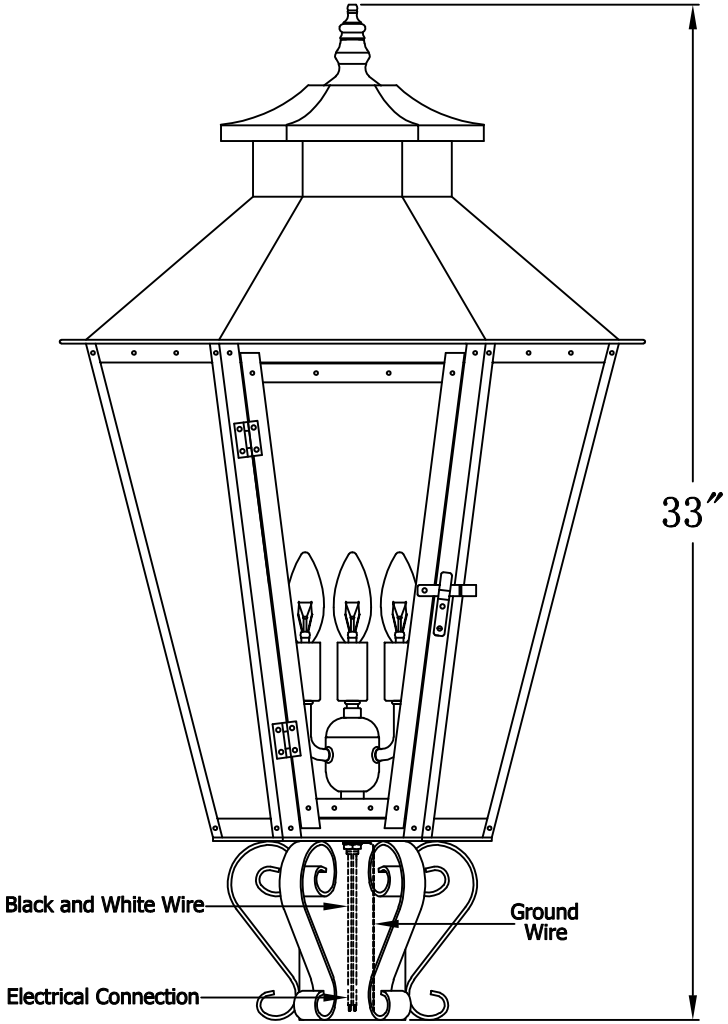

The CopperSmith		
Product Description	Drawing Description	9152 Hard Drive Foley Alabama 36536
Sockets:3-E12 Candelabra	REV:A/0	
Watts:3-60W	Date:04/13/2022	SKU Number:BS-63E
	Drawing by:Jason Huang	Product Name:Bayou Street 63 Electric