BAYOU STREET 62 Gas With Pendent Yoke
(BS-62G PY9)

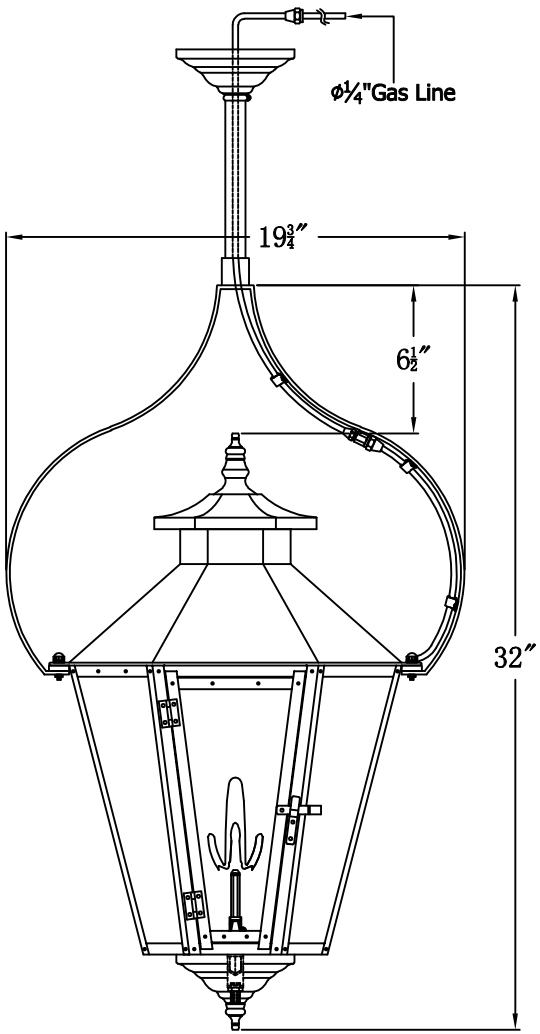

The CopperSmith		
Product Description	Drawing Description	9152 Hard Drive Foley Alabama 36536
Burner:Single	REV:A/0	
Gas Valve Name:VNG(P)50	Date:04/11/2022	SKU Number:BS-62G
	Drawing by:Jason Huang	Product Name:Bayou Street 62 Gas