MOUNT VERNON 19 Gas With Pendent Yoke
(MV-19G PY8)

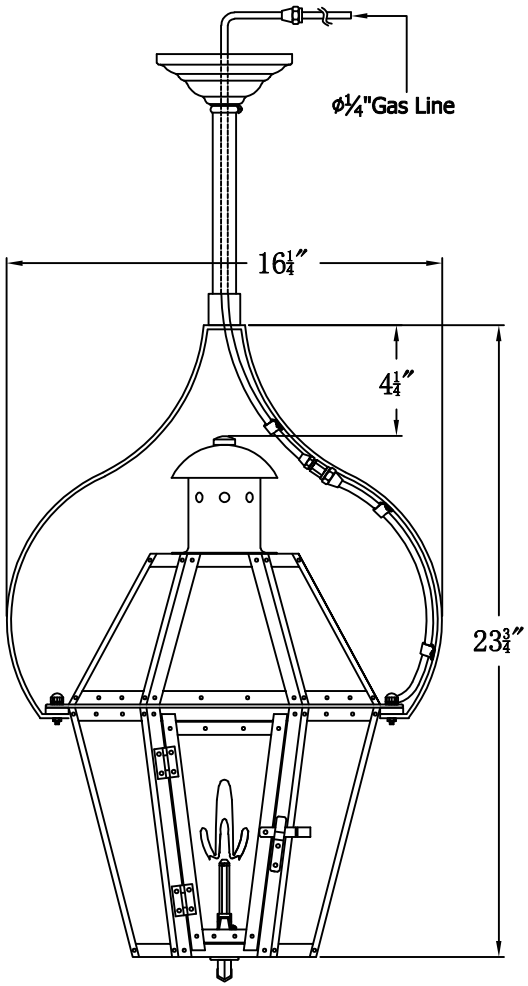

The CopperSmith		
Product Description	Drawing Description	9152 Hard Drive Foley Alabama 36536
Burner:Single	REV:A/0	
Gas Valve Name:VNG(P)50	Date:05/28/2022	SKU Number:MV-19G
	Drawing by:Jason Huang	Product Name:Mount Vernon 19 Gas